BAND-IT®

Hose Clamps

Preformed, Ultra-Lok and centre punch clamps, band, buckles and the tools to install them.

UES PROMURA 60 YEARS 1966 – 2026 CELEBRATING

CONTENTS

BAND-IT® JR 201 SS smooth ID preformed clamps	2
BAND-IT® Ultra-Lok clamps · 201 SS ¼ hard	3
BAND-IT® centre punch clamps	4
BAND-IT® band & buckles · 201 stainless steel	5
BAND-IT® Giant band & buckles · 201 stainless steel	6
BAND-IT® uncoated band & buckles · 316 stainless steel	6
BAND-IT® ID tags	7
BAND-IT® cable ties · 316 stainless steel	7
Tool instruction manuals	8

YOUR BAND-IT® DISTRIBUTOR

UES Promura
ENGINEERING & INDUSTRIAL SOLUTIONS
ESTABLISHED 1966

UES Promura
10-12 McWilliam Street
Springvale VIC 3171

(03) 9547 5833
sales@uespromura.com.au
www.uespromura.com.au

Distributor reference copy. Technical / issuer particulars retained; contact links localised.

201 STAINLESS STEEL

BAND-IT® JR smooth ID preformed clamps

CODE / BOX QTY	CLAMP ID MM	CLAMP WIDTH MM	THICKNESS MM
JS240 (100)	20.60	6.35	0.51
JS201 (100)	20.60	9.53	0.64
JS242 (100)	25.40	6.35	0.51
JS243 (100)	25.40	9.53	0.64
JS203 (100)	25.40	12.70	0.76
JS204 (100)	31.80	12.70	0.76
JS241 (100)	34.90	6.35	0.51
JS202 (100)	34.90	9.53	0.64
JS252 (100)	38.10	6.35	0.51
JS231 (100)	38.10	12.70	0.76
JS205 (100)	38.10	15.88	0.76
JS236 (100)	44.50	12.70	0.76
JS206 (100)	44.50	15.88	0.76
JS253 (100)	50.80	6.35	0.51
JS245 (100)	50.80	9.53	0.64
JS237 (100)	50.80	12.70	0.76
JS207 (100)	50.80	15.88	0.76
JS208 (100)	57.20	15.88	0.76
JS221 (100)	63.50	9.53	0.64
JS233 (100)	63.50	12.70	0.76
JS209 (100)	63.50	15.88	0.76
JS230 (100)	69.90	12.70	0.76
JS210 (50)	69.90	19.05	0.76
JS246 (100)	76.20	9.53	0.64
JS234 (100)	76.20	12.70	0.76
JS211 (50)	76.20	19.05	0.76
JS212 (50)	88.90	19.05	0.76
JS247 (100)	88.90	12.70	0.76
JS213 (25)	101.60	19.05	0.76
JS214 (25)	114.30	19.05	0.76
JS215 (25)	127.00	19.05	0.76
JS216 (25)	152.40	19.05	0.76

BAND-IT® 316 stainless steel clamps available on request.

As stiffer, thinner hose materials replace soft, thick-walled rubber, BAND-IT® developed the Smooth ID JR® preformed clamp in 201 and 316 steel. Its uniform, gap-free inside diameter virtually eliminates leaks, and double-wrapped band adds strength.

The Lip-lock design resists vibration — no hammering or crimping. Apply with the C001 tool and the J001 or J050 adapter depending on size, or the S750 pneumatic tool for high-speed, high-volume work.

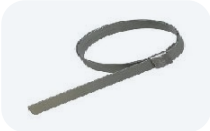

S750 pneumatic junior clamp tool

TOOL	USE
C001	BAND-IT® tool to use with adapters — 2 kg
J001	Adapter, recommended for band width < 13 mm
J050	Heavy-duty adapter, recommended for band width > 10 mm

Distributor reference copy. Technical / issuer particulars retained; contact links localised.

201 STAINLESS STEEL ¼ HARD · 0.76 MM THICK

ULTRA-LOK® clamps

Designed for quick installation, the highest clamping force and a gap-free inside diameter — the best choice for demanding applications.

- Strongest band clamping system available.
- Double-wrapped ¼ hard 201 SS for superior strength.
- Unique lock formed under full tension maximises tightness.
- Thicker buckle is 2–3 times stronger than other preformed clamps.
- Smooth inside diameter designed to eliminate leak paths.
- Buckle hood protects the lock from snags.
- Apply with UL4000-D Portable Tool.

CODE / BOX QTY	CLAMP ID MM	CLAMP WIDTH MM	BOX WEIGHT KG
UL2109 (50)	69.9	19.05	4.3
UL2119 (50)	76.0	19.05	4.8
UL2129 (50)	88.9	19.05	5.4
UL2139 (25)	101.6	19.05	2.9
UL2149 (25)	114.3	19.05	3.2
UL2159 (25)	127.0	19.05	3.4
UL2709 (25)	133.4	19.05	3.3
UL2179 (25)	165.1	19.05	4.2
UL2189 (25)	177.8	19.05	4.4
UL2289 (10)	228.6	19.05	2.3

UL4000-D 18 V rechargeable cordless tool

Applies all BAND-IT® Ultra-Lok clamps. Tap the image to open the instruction manual.

Distributor reference copy. Technical / issuer particulars retained; contact links localised.

201 STAINLESS STEEL · 0.64 MM THICK

BAND-IT® centre punch clamps

Designed to meet your specific application. Double-wrapped in 201 stainless steel or galvanised steel, for less demanding applications where minimising leaks and longevity are not critical. Locked by a hammer impact through a conical punch built into the tool.

CODE	MATERIAL	CLAMP ID MM	CLAMP WIDTH MM	BOX QTY	BOX WEIGHT KG
CP3S99	201SS	20	9.53	100	1.8
CP4S99	201SS	25	15.88	100	3.9
CP5S99	201SS	32	15.88	100	3.8
CP6S99	201SS	38	15.88	100	4.1
CP7S99	201SS	44	15.88	100	4.4
CP8S99	201SS	51	15.88	100	4.3
CP9S99	201SS	57	15.88	100	5.3
CP10S9	201SS	64	15.88	50	2.6
CP11S9	201SS	70	15.88	50	3.0
CP12S9	201SS	76	15.88	50	2.9
CP14S9	201SS	89	15.88	50	3.2
CP16S9	201SS	102	15.88	25	1.9
CP18S9	201SS	114	15.88	25	2.0
CP20S9	201SS	127	15.88	25	2.2
CP24S9	201SS	152	15.88	25	2.6
CP28S9	201SS	178	15.88	25	2.9
CP32S9	201SS	203	15.88	25	3.1

T300 centre punch tool

Distributor reference copy. Technical / issuer particulars retained; contact links localised.

201 STAINLESS STEEL · 30.5 M ROLL

BAND-IT® 201 stainless steel bands

The BAND-IT® type 201 stainless steel non-magnetic band is the preferred option for general banding applications, offering high tensile strength and good resistance to oxidation and weathering. Available in a range of widths and thicknesses.

EASYSCALE imprinted measurements on the band help you cut to length and eliminate costly waste. Packaged in a standard box or a durable plastic tote for easy dispensing.

CODE		WIDTH MM	THICKNESS MM	WEIGHT KG	BUCKLE CODE	WIDTH MM	WEIGHT KG
C202		6.35	0.51	0.9	C252	6.35	0.1
C203	Yellow tote	9.53	0.64	1.5	C253	9.53	0.3
C204	Blue tote	12.70	0.76	2.4	C254	12.70	0.8
C205	Green tote	15.88	0.76	3.0	C255	15.88	0.9
C206	Red tote	19.05	0.76	3.6	C256	19.05	1.5

Ear-Lokt™ buckles in widths to suit every BAND-IT® 201 band.

TOOL	DESCRIPTION	WEIGHT
C001	BAND-IT® tool for bands 6–20 mm wide	2 kg

CHOOSING YOUR STEEL

201 vs 316 stainless steel

Select the steel to suit the tensile strength or corrosion-resistance specification of your project.

CORROSION RESISTANCE	201 STAINLESS STEEL	316 STAINLESS STEEL
Mild atmospheric & fresh water	Good	Excellent
Industrial atmosphere	Good	Very Good
Marine atmosphere	Fair	Very Good
Salt water	No	Good
Mild chemical	Fair	Good
Oxidising chemical	Fair	Good
Reducing chemical	No	Good
Ultimate tensile strength	**690 MPa**	**550 MPa**

Distributor reference copy. Technical / issuer particulars retained; contact links localised.

201 STAINLESS STEEL · 30.5 M ROLL · 1.12 MM THICK

BAND-IT® Giant band

Giant Band is tough where tough counts. It produces the strongest band clamp on the market, can be formed into a single or double-wrapped clamp, and offers the widest and thickest band for maximum strength. 201 stainless steel offers good resistance to oxidation and many moderately corrosive agents.

CODE	WIDTH MM	WEIGHT KG
G430	19.05	5.2
G431	25.40	6.8
G432	31.75	8.5
Giant buckles · 25 per pack		
G440	19.05	0.8
G441	25.40	1.0
G442	31.75	1.4

Giant Ear-Lokt™ buckle

TOOL	DESCRIPTION	WEIGHT
G402	BAND-IT® Giant tool for bands 19.05–31.75 mm wide × 1.12 mm thick	5 kg

316 STAINLESS STEEL · 30.5 M ROLL

BAND-IT® 316 stainless steel band — uncoated

BAND-IT® 316 stainless steel straps provide superior corrosion resistance in fresh water and typical atmospheres, and are non-magnetic. Ideal for food processing, chemical and agricultural hose assemblies, marine splash zones and some acidic environments.

CODE	WIDTH MM	THICKNESS MM	WEIGHT KG
C403-316SS	9.53	0.63	1.5
C404-316SS	12.70	0.76	2.4
C406-316SS	19.05	0.76	3.6
Buckles · 100 per pack			
C453-316SS	9.53		0.3
C454-316SS	12.70		0.8
C456-316SS	19.05		1.5

TOOL	DESCRIPTION	WEIGHT
C001	BAND-IT® tool for bands 6–20 mm wide	2.0 kg

Distributor reference copy. Technical / issuer particulars retained; contact links localised.

316 STAINLESS STEEL · 100 PER PACK

ID tagging system

Identify cable bundles or hose assemblies with permanent, imprinted 316 stainless steel tags applied with Ball-Lokt™ ties. An ID tag imprinter is available with a choice of character sizes.

CODE	LENGTH MM	WIDTH MM	WEIGHT G
ID440	51	19	300
ID441	63	38	800
ID442	89	19	500

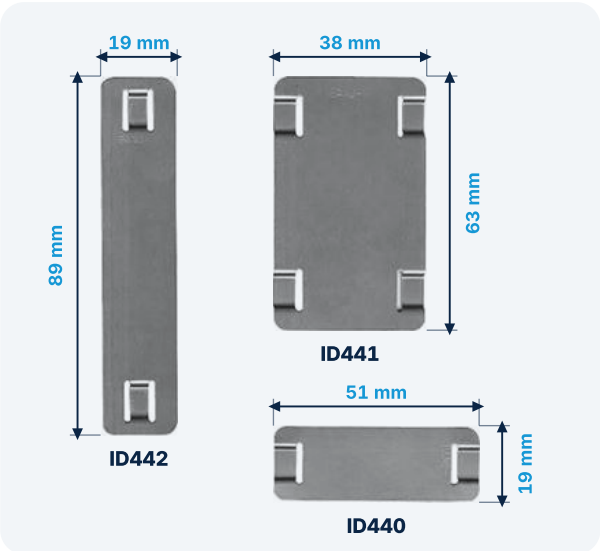

ID tags shown to scale with dimensions in mm

316 STAINLESS STEEL · 100 PER PACK

Ball-Lokt™ cable ties

From identification tagging to bundling cables, Ball-Lokt™ ties in 316 stainless steel last longer than nylon ties, especially in extreme climates. The epoxy-coated ties are UV resistant and resist cracking at low temperatures and in harsh conditions. Install by hand or with the KS652 tool for uniform tension and a clean, safe tail cut-off.

CODE	LENGTH MM	WIDTH MM	WEIGHT G
KT6U046-200	200	4.6	250
KT6U046-350	350	4.6	400
KT6U046-500	500	4.6	500
KT6U078-200	200	7.8	500
KT6U078-350	350	7.8	750
KT6U078-500	500	7.8	900
Black epoxy fully coated Ball-Lokt™ ties · 316 SS			
KT6B046-200	200	4.6	300
KT6B078-350	350	7.8	800

TOOL	DESCRIPTION	WEIGHT
KS652	Ball-Lokt™ tensioner & cutter for SS cable ties	600 g

Distributor reference copy. Technical / issuer particulars retained; contact links localised.

TOOLS & INSTRUCTIONS

Instruction manuals

Click a tool to save or open its instruction manual.

C001 BAND-IT® tool
Bands 6–20 mm
INSTRUCTION MANUAL →

S750 pneumatic junior clamp tool
Operating & spare parts manual
INSTRUCTION MANUAL →

J001 adapter
For band widths less than 10 mm
INSTRUCTION MANUAL →

J050 heavy-duty adapter
For band widths greater than 10 mm
INSTRUCTION MANUAL →

UL4000-D cordless tool
18 V rechargeable
INSTRUCTION MANUAL →

KS652 Ball-Lokt™ tool
Tensioner & cutter
INSTRUCTION MANUAL →

G402 Giant tool
Giant band
INSTRUCTION MANUAL →

T300 centre punch tool
Centre punch clamps
INSTRUCTION MANUAL →

▶ **Watch the S750 pneumatic junior clamp tool video tutorial**

Starting a project and need BAND-IT® stock?

We ship nationwide. Have a question?
Our team is happy to help.

(03) 9547 5833
sales@uespromura.com.au
www.band-it-australia.com.au

Distributor reference copy. Technical / issuer particulars retained; contact links localised.